Minebea Power Semiconductor Device Inc.
Power Diode Status List

Date: Aug. 2025

Compliance status of RoHS directive

C:Compliant **S.C**:Compliant (Included RoHS exemption substance) **N**:Non compliant

Production Status

M:Mass production **O**:Order production **U**:Under development
W:Working sample **N**:Not for new design **D**:Discontinued
E:Engineering sample

Load Dump Surge Suppressor Diode

Type	Absolute maximum ratings			Characteristics			Outline	RoHS Status	Production year	Production status
	P_{RSM} (kW)	V_{DC} (V)	T_j (°C)	V_Z (V) Min.	V_Z (V) Max.	Test Current (mA)				
ZSH5MA27(※)	3.0kW 62A	18	-40 ~+150	24.0	30.0	10	6A	S.C	2000	M
ZSH5MA27(A)(※)										N
ZSH5MC27(※)	3.2kw 65A							S.C	2007	M
ZSH5MC27(S)(※)										
ZSH5MAZ27	3.4kW 70A	22						S.C	2009	M
ZSH8MD27	5.7kW 130A						6B	S.C	2015	M
ZSH8MD40	5.7kW 80A	32		36.0	44.0	10		S.C	2015	M
ZSH5MT27C	3.4kW 70A	22		24.0	30.0	10	7A	S.C	2009	M
ZSH5MT27(Z)	4.3kW 90A									O
ZSH5MT40C	4.3kW 62A	32		36.0	44.0	10				M
ZSH5MT48C	4.3kW 50A	39		43.2	52.8	10				M
ZSH5MV14	4.3kW 200A	11		13.0	15.0	10	5	S.C	2013	M
ZSH5MV27	4.3kW 100A	22		24.0	30.0	10			2012	M

※ Please consider alternative new products as follows.

ZSH5MA27/27(A) --> ZSH5MAZ27,ZSH5MT series,ZSH8MD27
ZSH5MC27/27(S) --> ZSH5MAZ27,ZSH5MT series,ZSH8MD27

◆Surface Mount Type

Type		Absolute maximum ratings			Characteristics			Outline	RoHS Status	Production year	Production status
		P_{RSM} (kW)	V_{RM} (V)	T_j (°C)	Vz (V) Min.	Vz (V) Max.	Test Current (mA)				
DAM1MB	12	0.6	9.7	-65 ~+185	11.4	12.7	1	4A	S.C	2013	M
	13		10.5		12.4	14.1	1				M
	15		12.1		13.5	15.6	1				M
	16		12.9		15.3	17.1	1				M
	18		14.5		16.8	19.1	1				M
	20		16.2		18.8	21.2	1				O
	22		17.8		20.8	23.3	1				M
	24		19.4		22.7	25.6	1				M
	27		21.8		25.1	28.9	1				M
	30		24.3		28.0	32.0	1				M
	33		26.8		31.0	35.0	1				M
	36		29.1		33.4	38.6	1				M
	39		31.6		36.1	41.9	1				M
	43		34.8		39.8	46.2	1				O
	47		38.0		43.3	50.7	1				M
	51		41.3		46.9	55.1	1				M
	68		55.1		61.2	74.8	1				M
	75		60.7		67.5	82.5	1				M
	82		66.4		73.8	90.2	1				O
DAM2MB	12	1.2	9.7	-65 ~+185	11.4	12.7	1	4B	S.C	2013	O
	13		10.5		12.4	14.1	1				O
	15		12.1		13.5	15.6	1				O
	16		12.9		15.3	17.1	1				O
	18		14.5		16.8	19.1	1				O
	20		16.2		18.8	21.2	1				O
	22		17.8		20.8	23.3	1				O
	24		19.4		22.7	25.6	1				O
	27		21.8		25.1	28.9	1				M
	30		24.3		28.0	32.0	1				M
	33		26.8		31.0	35.0	1				M
	36		29.1		33.4	38.6	1				M
	39		31.6		36.1	41.9	1				M
	43		34.8		39.8	46.2	1				O
	47		38.0		43.3	50.7	1				M
	51		41.3		46.9	55.1	1				O
	68		55.1		61.2	74.8	1				O
	75		60.7		67.5	82.5	1				O
	82		66.4		73.8	90.2	1				O
DAM3MB	12	1.8	9.7	-65 ~+185	11.4	12.7	1	4C	S.C	2013	M
	13		10.5		12.4	14.1	1				M
	15		12.1		13.5	15.6	1				M
	16		12.9		15.3	17.1	1				M
	18		14.5		16.8	19.1	1				O
	20		16.2		18.8	21.2	1				M
	22		17.8		20.8	23.3	1				O
	24		19.4		22.7	25.6	1				O
	27		21.8		25.1	28.9	1				M
	30		24.3		28.0	32.0	1				M
	33		26.8		31.0	35.0	1				M
	36		29.1		33.4	38.6	1				M
	39		31.6		36.1	41.9	1				M
	43		34.8		39.8	46.2	1				O
	47		38.0		43.3	50.7	1				M
	51		41.3		46.9	55.1	1				M
	68		55.1		61.2	74.8	1				M
	75		60.7		67.5	82.5	1				O
	82		66.4		73.8	90.2	1				M

High Voltage - Fast Recovery Diode

◆Resin Molded Type

Type	Absolute maximum ratings				Characteristics		Outline	RoHS Status	Production year	Production status
	V_{RRM} (kV)	* $I_{F(AV)}$ (mA)	I_{FSM} (A)	T_j (°C)	V_{FM} (at I_{FM}) (V) (mA)	t_{rr} (ns)				
DHM3T30	3	3 [15.75]	0.5	-40 ~+120	13 (5)	100	1B	S.C	1989	M
DHM3P40	4				13 (5)	100	1B	S.C	1989	M
DHM3G80	8				25 (5)	100	1F	S.C	1999	M
DHM3J120	12				42 (5)	100	1G	S.C	1999	M
DHM3FJ60	6	1 [63] 3 [15.75]	0.5		22 (5)	70	1F	S.C	1999	M
DHM3FG80	8				28 (5)	70	1F	S.C	1999	M
DHM3UM80	8	1 [100] 3 [15.75]	0.5		23 (5)	40	1F	S.C	1998	M

* [ ] : Frequency, unit (kHz)

High Voltage - Fast Recovery Diode (For Automotive)

◆Resin Molded Type

Type	Absolute maximum ratings				Characteristics		Outline	RoHS Status	Production year	Production status
	V_{RRM} (kV)	$I_{F(AV)}$ (mA)	I_{FSM} (A)	T_j (°C)	V_{FM} (at I_{FM}) (V) (mA)	t_{rr} (ns)				
DHM10A30	3.0	10	1	+150	8.4 (10)	-	1K	S.C	2011	M
DHM30A10	1.0	30	3		2.0 (10)	-	1M	S.C	2013	M
DHM30A20	2.0	30	3		5.0 (10)	-	1M	S.C	2013	M
DHM30A25	2.5	30	3		5.0 (10)	-	1M	S.C	2014	M
DHM30A30	3.0	30	3		6.0 (10)	-	1F	S.C	2013	M
DHM30A40	4.0	30	3		10.0 (10)	-	1L	S.C	2011	O

High Voltage - Fast Recovery Diode (For Automotive) Lead(Pb)-Free

◆Resin Molded Type

Type	Absolute maximum ratings				Characteristics		Outline	RoHS Status	Production year	Production status
	V_{RRM} (kV)	$I_{F(AV)}$ (mA)	I_{FSM} (A)	T_j (°C)	V_{FM} (at I_{FM}) (V) (mA)	t_{rr} (ns)				
DHM30A10E	1.0	30	3	+150	2.0 (10)	-	1M	C	2017	M
DHM30A20E	2.0	30	3		5.0 (10)	-	1M	C	2017	M
DHM30A25E	2.5	30	3		5.0 (10)	-	1M	C	2016	M
DHM30A30E	3.0	30	3		6.0 (10)	-	1F	C	2017	M
DHM30A40E	4.0	30	3		10.0 (10)	-	1L	C	2017	M

Alternator Diodes

◆Super Low Loss Diode

Type	Absolute maximum ratings		Characteristics			Outline	RoHS Status	Production year	Production status
	IF(AV) (A)	Tj (°C)	Vz (V) Min.	Vz (V) Max.	VFM (at IFM) (V) (A)				
MSM35J22	35	-40～+175	20	24	0.3 (100)	10	S.C	-	M
MSM35J22R									
MSM50J22	50	-40～+175	20	24	0.12 (100)	10	S.C	-	M
MSM50J22R									

◆Standard Type Diode

Type	Absolute maximum ratings		Characteristics			Outline	RoHS Status	Production year	Production status
	IF(AV) (A)	Tj (°C)	Vz (V) Min.	Vz (V) Max.	VFM (at IFM) (V) (A)				
ZSM35C22	35	-40～+205	20	23	1.3 (100)	9A	S.C	2013	D
ZSM35C22R						9C			
ZSM50C22	50				1.2 (100)	9A		2012	D
ZSM50C22R						9C			
ZSM70A22	70 (Tc≦205℃)	-40～+225		24	1.2 (100)	9A		2013	D
ZSM70A22R	50 (Tc≦225℃)					9C			

Self-powered Synchronous Rectifying device

◆Self-powered Synchronous Rectifying device

Type	Absolute maximum ratings				Characteristics					Outline	RoHS Status	Production year	Production status
	VRRM (V)	$I_{F(AV)}$ (A)	I_{FSM} (A)	T_{STG} (°C)	$R_{DS(ON)}$ (mΩ) Typ.	$R_{DS(ON)}$ (mΩ) Max.	V_F(V) Typ.	V_F(V) Max.	I_R(μA) Max				
MSB25A6	600	25	550	-55～+150	37 (TBD)	44 (TBD)	0.80	TBD	320	11	S.C	2026	U
MSB25A6L									160				
MSB25A6N													
MSB15A6	600	15	400 (TBD)		70 (TBD)	80 (TBD)	TBD	TBD	TBD			2026	U
MSB15A6L													
MSB15A6N													

Discontinued

◆General-Use Rectifier Diode

Type	Absolute maximum ratings				Characteristics		Outline	RoHS Status	Production year	Production status
	V_{RRM} (V)	$I_{F(AV)}$ (A)	I_{FSM} (A)	T_j (°C)	V_{FM} (at I_{FM}) (V) (A)	t_{rr} (μs)				
H14A	100	1.0	45	-40 ~+175	1.0 (1.0)	–	2A	S.C	1989	D
B	200									
C	300									
D	400									
E	500									
F	600									
H	800			-40 ~+165						
J	1,000									
V06C	200	1.1	35	-65 ~+175	1.4 (1.1)	–	2A	S.C	1976	D
E	400									
G	600									
J	800									
V03C	200	1.3	40		1.1 (1.3)	–	2A	S.C	1975	
E	400									
G	600									
J	800									
U05B	100	2.5	100		1.1 (2.5)	–	2B	S.C	1975	D
C	200									
E	400									
G	600									
J	800									
U15B	100	3	80		1.0 (3.0)	–	2B	S.C	1978	D
C	200									
E	400									
G	600		60							
J	800									

◆Zener Diode

Type	Absolute maximum ratings			Characteristics			Outline	RoHS Status	Production year	Production status
	P (W)	P_{RSM} (Wp)	T_j (°C)	V_Z (V) Min.	V_Z (V) Max.	Test Current (mA)				
AW01- 06	1.0	80	-40 ~+150	5.2	6.8	60	2A	S.C	1976	D
AW01/AU01-07	1.0/2.5	80/160	-40 ~+150 / -40 ~+165	6.2	7.9	25/65	2A/2B	S.C/S.C	1976	D / D
08				7.7	8.7	25/65				
09				8.5	9.6	25/65				
10				9.4	10.6	25/65				
11				10.4	11.6	25/65				
12				11.4	12.7	25/65				
13				12.4	14.1	25/65				
15				13.5	15.6	15/40				
16				15.3	17.1	15/40				
18				16.8	19.1	15/40				
20				18.8	21.2	15/40				
22				20.8	23.3	15/40				
24				22.7	25.6	10/25				
27				25.1	28.9	10/25				
30				28.0	32.0	10/25				
33				31.0	35.0	10/25				

Discontinued

◆Fast Recovery Diode

Type	Absolute maximum ratings				Characteristics		Outline	RoHS Status	Production year	Production status
	V_{RRM} (V)	$I_{F(AV)}$ (A)	I_{FSM} (A)	T_j (°C)	V_{FM} (at I_{FM}) (V) (A)	t_{rr} (μs)				
DFG1D1	100	1.0	30	-65 ~+150	1.5 (1.0)	50ns	2A	S.C	1986	D
2	200									
4	400									
DFG1C1	100	1.0	35		1.2 (1.0)	0.1	2A	S.C	1985	D
2	200									
4	400									
6	600		30		1.6 (1.0)					
8	800									
DFG3A1	100	3.0	70		1.3 (3.0)	0.1	2B	S.C	1985	D
2	200									
4	400									
V19B	100	1.0	30		1.2 (1.0)	0.2	2A	S.C	1977	D
C	200									
E	400									
G	600									
DFG1A8	800	1.0	40	-65 ~+165	1.2 (1.0)	0.2	2A	S.C	1982	D
H114B	200	1.0	40	-40 ~+150	1.15 (1.0)	0.2	2A	S.C	1989	D
D	400									
E	500									
F	600									
U19B	100	2.5	80	-65 ~+150	1.3 (2.5)	0.2	2B	S.C	1978	D
C	200									
E	400									
DFG2A6	600	2.5	80	-65 ~+165	1.3 (2.5)	0.2	2B	S.C	1982	D
8	800									
V11J	800	0.4	30	-65 ~+150	2.5 (0.4)	0.4	2A	S.C	1975	D
L	1,000									
M	1,300									
N	1,500									
V09C	200	0.8	35	-65 ~+165	1.6 (0.8)	0.4	2A	S.C	1975	D
E	400									
G	600									
U07J	800	1.0	50	-65 ~+140	2.5 (1.0)	0.4	2B	S.C	1975	D
L	1,000									
M	1,300									
N	1,500									
U06C	200	2.0	80	-65 ~+150	1.2 (2.0)	0.4	2B	S.C	1975	D
E	400									
G	600									

◆Controlled Avalanche Diode

Type	Absolute maximum ratings					Characteristics	Outline	RoHS Status	Production year	Production status
	V_{RRM} (V)	$I_{F(AV)}$ (A)	P_{RM} (W)	I_{FSM} (A)	T_j (°C)	V_{FM} (at I_{FM}) (V) (A)				
H24F	600	1.0	1,000	45	-65 ~+175	1.0 (1.0)	2A	S.C	1989	D
H	800				-65 ~+165					
J	1,000									
V08E	400	1.1	40	35	-65 ~+175	1.4 (1.1)	2A	S.C	1975	D
G	600									
J	800									
V07E	400	1.3	40	40		1.1 (1.3)	2A	S.C	1975	D
G	600									
J	800									
V17A	50	1.3	1,500	50	-40 ~+165	1.1 (1.3)	2A	S.C	1975	D
B	100									
C	200									
D	300									
E	400									
U17B	100	2.5	3,000	100	-40 ~+175	1.1 (2.5)	2B	S.C	1975	D
C	200									
D	300									
E	400									

◆Surge Suppressor Diode

Type	Absolute maximum ratings			Characteristics			Outline	RoHS Status	Production status
	P_{RSM} (kW)	V_{DC} (V)	T_j (°C)	Vz (V) Min.	Vz (V) Max.	Test Current (mA)			
DAM1MA/3MA10	0.6/1.8	7	−40～+150	9.4	10.6	25/75	4A/4C	S.C	D
11		8		10.4	11.6	25/75			
12		9		11.4	12.7	25/75			D
13		10		12.4	14.1	25/75			
15		11		13.5	15.6	25/75			
16		12		15.3	17.1	15/75			
18		13		16.8	19.1	15/45			
20		14		18.8	21.2	15/45			
22		16		20.8	23.3	15/45			
24		18		22.7	25.6	10/30			
27		20		25.1	28.9	10/30			
30		22		28.0	32.0	10/30			
33		24		31.0	35.0	10/30			
36		26		33.4	38.6	10/30			
39		28		36.1	41.9	10/20			
43		31		39.8	46.2	6/20			
47		34		43.3	50.7	6/20			
51		37		46.9	55.1	6/20			
68		49		61.2	74.8	4/10			
75		54		67.5	82.5	4/10			
82		59		73.8	90.2	3/10			

◆General-Use Rectifier Diode

Type	Absolute maximum ratings				Characteristics		Outline	RoHS Status	Production status
	V_{RRM} (V)	* $I_{F(AV)}$ (A)	I_{FSM} (A)	T_j (°C)	V_{FM} (at I_{FM}) (V) (A)	t_{rr} (μs)			
DSA3A1	100	3.0	120	-40~+150	1.0 (3.0)	-	2C	S.C	D
2	200								
4	400								

◆General-Use Rectifier Diode

Type	Absolute maximum ratings				Characteristics		Outline	RoHS Status	Production status
	V_{RRM} (V)	* $I_{F(AV)}$ (A)	I_{FSM} (A)	T_j (°C)	V_{FM} (at I_{FM}) (V) (A)	t_{rr} (μs)			
DSM1MA1	100	1.0	25	-40 ~+150	1.1 (1.0)	-	4A	S.C	D
2	200								
4	400								
DSM3MA1	100	3.0	80	-40 ~+150	1.0 (3.0)	-	4B	S.C	D
2	200								
4	400								

◆Fast Recovery Diode

Type	Absolute maximum ratings				Characteristics		Outline	RoHS Status	Production year	Production status
	V_{RRM} (V)	$I_{F(AV)}$ (A)	I_{FSM} (A)	T_j (°C)	V_{FM} (at I_{FM}) (V) (A)	t_{rr} (ns)				
DFM1MF2	200	1.0	25	-40 ~+150	0.95 (1.0)	35	4A	S.C	1997	D
DFM3MF2	200	3.0	50	-40 ~+150	0.95 (3.0)	35	4B	S.C	1997	D

Discontinued

◆Surge Suppressor Diode

Type	Absolute maximum ratings			Characteristics			Outline	RoHS Status	Production status
	P_{RSM} (kW)	V_{DC} (V)	T_j (°C)	V_Z (V) Min.	V_Z (V) Max.	Test Current (mA)			
DAM1SA/1A10	0.6	7	-40 ~+150	9.4	10.6	25	1A/1B	S.C / S.C	D / D
11		8		10.4	11.6	25			
12		9		11.4	12.7	25			
13		10		12.4	14.1	25			
15		11		13.5	15.6	25			
16		12		15.3	17.1	15			
18		13		16.8	19.1	15			
20		14		18.8	21.2	15			
22		16		20.8	23.3	15			
24		18		22.7	25.6	10			
27		20		25.1	28.9	10			
30		22		28.0	32.0	10			
33		24		31.0	35.0	10			
36		26		33.4	38.6	10			
39		28		36.1	41.9	10			
43		31		39.8	46.2	6			
47		34		43.3	50.7	6			
51		37		46.9	55.1	6			
DAM3A/3B10	1.8	7	-40 ~+150	9.4	10.6	75	1E/1D	S.C / S.C	D / D
11		8		10.4	11.6	75			
12		9		11.4	12.7	75			
13		10		12.4	14.1	75			
15		11		13.5	15.6	75			
16		12		15.3	17.1	75			
18		13		16.8	19.1	45			
20		14		18.8	21.2	45			
22		16		20.8	23.3	45			
24		18		22.7	25.6	30			
27		20		25.1	28.9	30			
30		22		28.0	32.0	30			
33		24		31.0	35.0	30			
36		26		33.4	38.6	30			
39		28		36.1	41.9	30			
43		31		39.8	46.2	20			
47		34		43.3	50.7	20			
51		37		46.9	55.1	20			

◆High Voltage – Fast Recovery Diode

Type	Absolute maximum ratings				Characteristics		Outline	RoHS Status	Production status
	V_{RRM} (kV)	* $I_{F(AV)}$ (mA)	I_{FSM} (A)	T_j (°C)	V_{FM} (at I_{FM}) (V) (mA)	t_{rr} (ns)			
DHM3S20	2	3 [15.75]	0.5	-40 ~+120	10 (5)	100	1B	S.C	D
DHM3UG120	12	1 [100] 3 [15.75]			36 (5)	40	1G	S.C	D
DHM3C140	14	3 [15.75]			45 (5)	100	1H	S.C	D

*[ ] : Frequency,unit (kHz)

◆Load Dump Surge Suppressor Diode

Type	Absolute maximum ratings			Characteristics			Outline	RoHS Status	Production status
	P_{RSM}(kW I_{RSM}(A)	V_{DC} (V)	T_j (°C)	V_Z (V) Min.	V_Z (V) Max.	I_Z (mA)			
ZSA5A27	3.0kW 62A	18	-40 ~+150	24.0	30.0	10	3A	S.C	D
ZSA5MA27							3B	S.C	D
ZSH5MA27(S)							6A	S.C	D
ZSH5MT53C	4.3kW 45A	43		47.7	58.3	10	7A	S.C	D
ZSH5ME27	3.4kW 70A	22		24.0	30.0	10	8	S.C	D

◆Fast Recovery Diode

Type	Absolute maximum ratings				Characteristics		Outline	RoHS Status	Production status
	V_{RRM} (kV)	* $I_{F(AV)}$ (A)	I_{FSM} (A)	T_j (°C)	V_{FM} (at I_{FM}) (V) (A)	t_{rr} (ns)			
DFG1E 6	600	0.3	5	-65～+150	5.0(0.3)	35	2A	S.C	D
8	800								
10	1,000								

Outline

[Dimensions in mm]

●Outline No.1

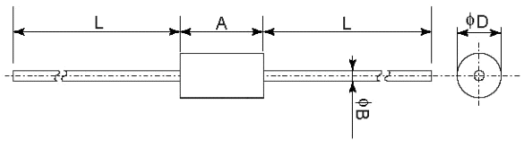

Items	A	ϕD	ϕB	L (Min.)
1A	3	2.5	0.6	28
1B	5	2.65	0.6	27
1C	5	2.65	0.8	27
1D	6	3.6	0.8	26
1E	7.5	6.4	1.2	26
1F	6.5	2.5	0.5	28
1G	10	2.5	0.5	26
1H	10	3	0.6	26,28
1J	8	3	0.6	28
1K	6.5	2.5	0.5	27
1L	8	3	0.6	27
1M	5	2.5	0.5	27

●Outline No.2

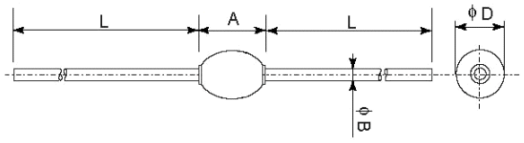

Items	A (Max.)	ϕD (Max.)	ϕB	L (Min.)
2A	5	3.5	0.8	29
2B	7	5	1.2	28
2C	7	5	1.2	27

●Outline No.3A

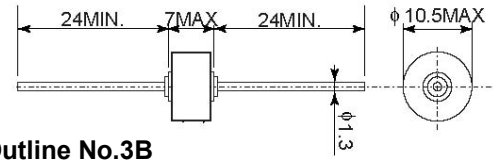

●Outline No.3B

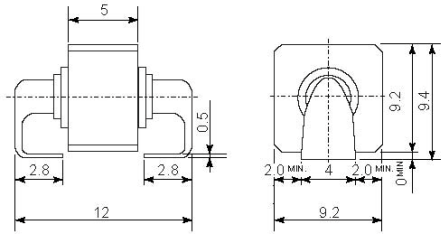

●Outline No.4

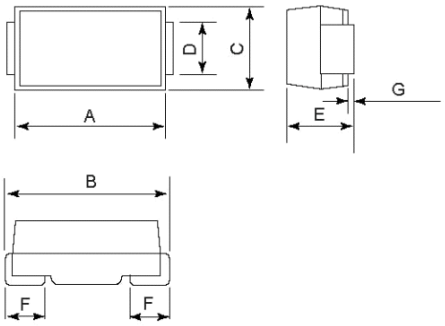

Items	A	B	C	D	E	F	G
4A	4.3	4.7	2.5	1.5	2.0	1.2	0.1
4B	4.4	5.4	3.6	2.0	2.3	1.2	0.2
4C	7.0	7.6	4.0	2.0	2.5	1.4	0.2

●Outline No.5

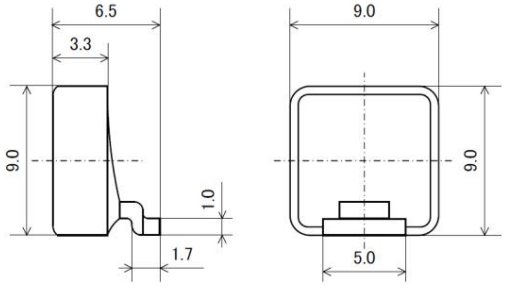

●Outline No.6

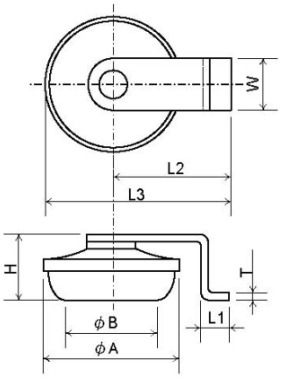

●Outline No.7A, 7B

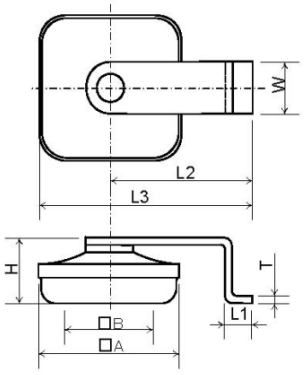

Items	A	B	L1	L2	L3	H	W	T
6A	9.6	7.4	2.0	8.3	13.1	4.4	3.5	0.5
6B*	9.6	-	2.0	8.3	13.1	6.0	3.5	0.5
7A	10.0	7.5	2.0	10.0	15.0	4.4	3.5	0.5
7B**	10.0	7.5	2.0	10.0	15.0	4.4	2.7	0.5

*:Packages is different **:JEDEC DO-218AB Compatible

Outline

[Dimensions in mm]

●Outline No.8

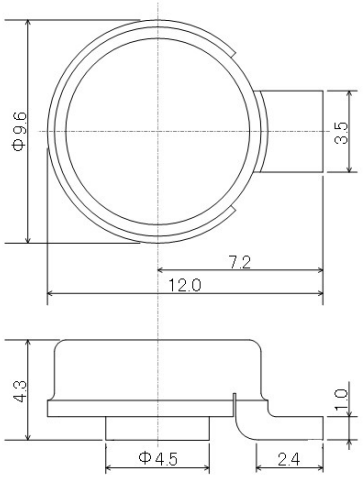

●Outline No.11

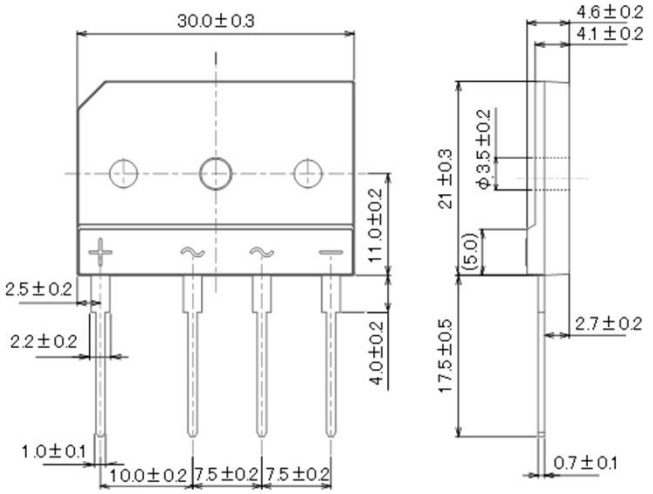

●Outline No.9A, 9B, 9C, 9D

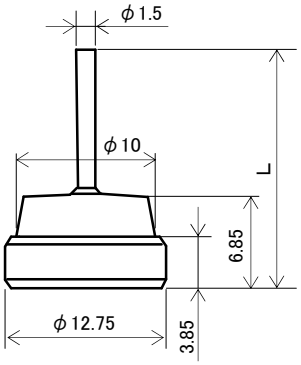

Items	L
9A	19.2
9B	28.5
9C	17.0

●Outline No.10

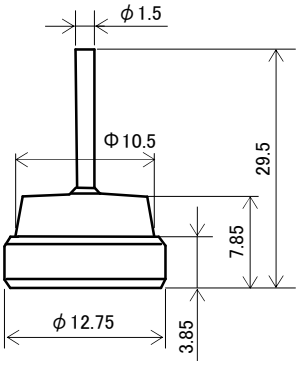

Notices

1. The information given herein, including the specifications and dimensions, is subject to change without prior notice to improve product characteristics. Before ordering, purchasers are advised to contact Minebea Power Semiconductor Device (MPSD) sales department.
2. Please be sure to read “Precautions for Safe Use and Notices” in the individual brochure before use.
3. Very high reliability is in a use. (such as use in nuclear power control, aerospace and aviation, life-support-related medical equipment, fuel control equipment and various kinds of safety equipment), Please do not use it.
4. In no event shall MPSD be liable for any damages that may result from an accident or any other cause during operation of the user’s units according to this data sheets. MPSD assumes no responsibility for any intellectual property claims or any other problems that may result from applications of information, products or circuits described in this data sheets.
5. In no event shall MPSD be liable for any failure in a semiconductor device or any secondary damage resulting from use at a value exceeding the absolute maximum rating.
6. No license is granted by this data sheets under any patents or other rights of any third party or of MPSD.
7. This data sheets may not be reproduced or duplicated, in any form, in whole or in part , without the expressed written permission of MPSD.
8. The products (technologies) described in this data sheets are not to be provided to any party whose purpose in their application will hinder maintenance of international peace and safety not are they to be applied to that purpose by their direct purchasers or any third party. When exporting these products (technologies), the necessary procedures are to be taken in accordance with related laws and regulations.

ご注意

１．本資料に掲載した内容は、予告なく変更することがありますのでご了承ください。
２．製品ご使用の前に「使用上の注意」をよくお読みのうえ、正しくご使用下さい。
３．極めて高い信頼性が要求される用途（原子力制御用、航空宇宙用、交通機器、ライフサポート関連の医療機器、燃焼制御機器、各種安全機器など）に使用される場合は、特に高信頼性が確保された半導体デバイスの使用及び使用側でフェイルセイフなどを配慮した安全性確保をして下さい。または当社営業窓口にご照会下さい。
４．本資料に記載された情報、製品や回路の使用に起因する損害または特許権その他権利の侵害に関しては、当社は一切その責任を負いません。
５．絶対最大定格値を越えてご使用された場合の半導体デバイスの故障及び二次的損害につきましては、弊社はその責任を負いません。
６．本資料によって第三者またはミネベアパワーデバイス株式会社の特許権その他権利の一部を許諾するものではありません。
７．本資料の一部または全部を当社に無断で転載または複製する事を堅くお断り致します。
８．本資料に記載された製品（技術）を国際的平和および安全の維持の妨げとなる使用目的を有する者に再提供したり、またそのような目的に自ら使用したり第三者に使用させたりしないようにお願いします。なお、輸出などされる場合は外為法の定めるところに従い必要な手続きをおとりください。

ホームページ：https://www.minebea-psd.com/

URL：https://www.minebea-psd.com/en